DATA SHEET

DOWNLIGHT
Item: LM29130

Specication:

Material	Aluminum
Dimension	Ø92*26mm
Input	AC220~240V
Lampholder	Gu10
Cut size	Ø80mm
Max wattage	50W

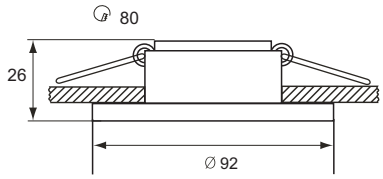

Color:
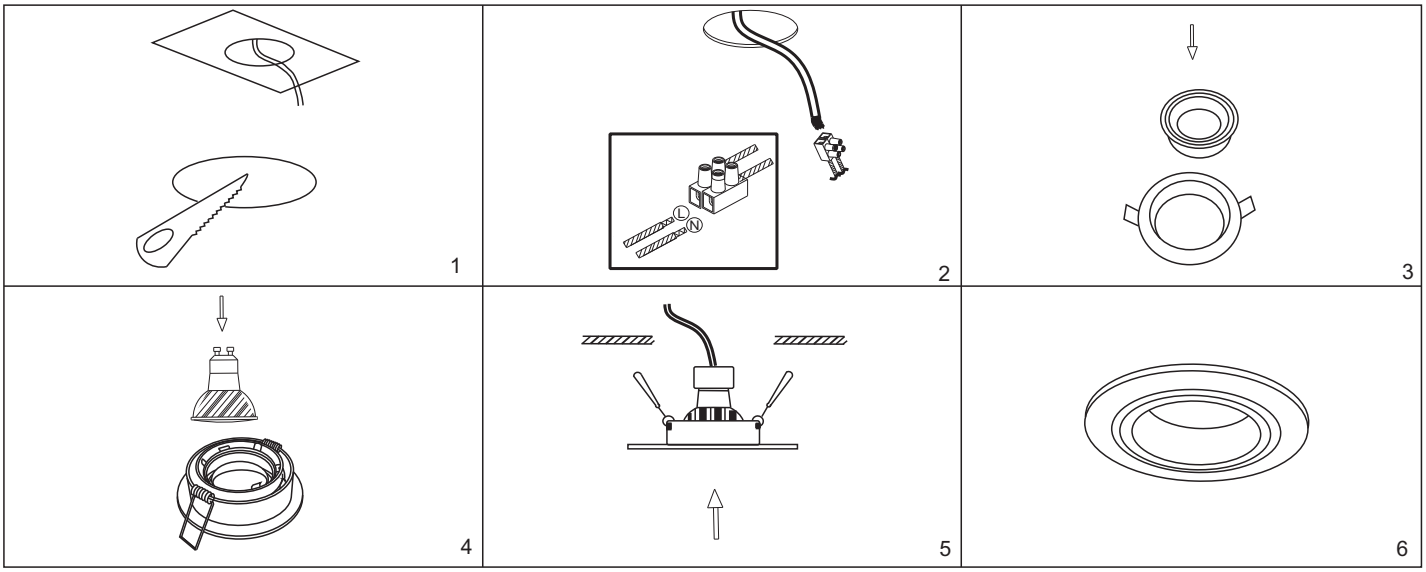
Installlation